NOTES:
1. MATERIALS AND FINISHES
   BODY – BRASS, NICKEL PLATING
   CONTACT – PHOSPHOR BRONZE, GOLD PLATING
   INSULATOR – PTFE
2. ELECTRICAL:
   A. IMPEDANCE: 50 OHM
   B. FREQUENCE RANGE: DC–11 GHZ

THIRD ANGLE PROJ.

REVISIONS

REV	DESCRIPTION	DATE	ECO	APPR
A	NF–SMAM–NT3G–50 WAS ADT–87042804\N/A\	29–Dec–87	--	--
B	SEE SHEET 1	17–Apr–00	--	TONY
C	REDRAWN TO UPDATE FORMAT	9/29/06	47308	

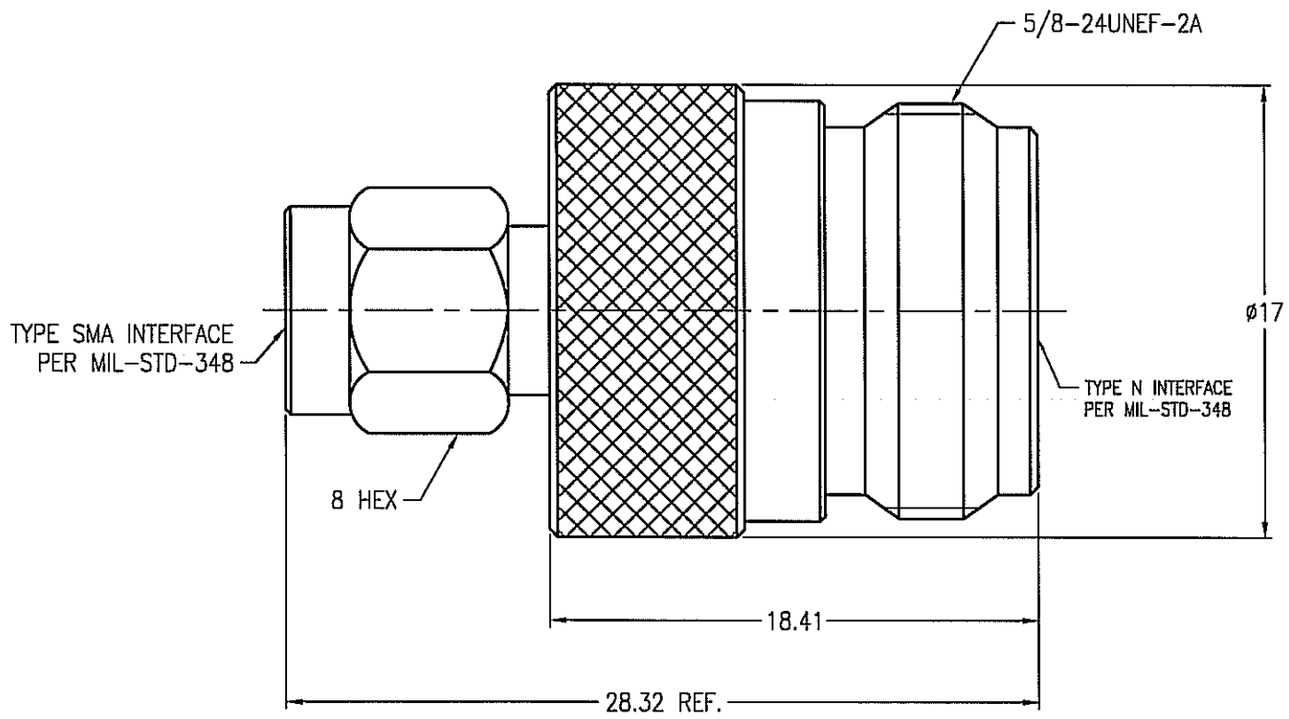

CUSTOMER OUTLINE DRAWING

ALL OTHER SHEETS ARE FOR INTERNAL USE ONLY

UNLESS OTHERWISE SPECIFIED, DIMENSIONS ARE IN METRIC AND TOLERANCES ARE:

0.5 – 6mm	6 – 30mm	30 – 120mm	ANGLES
±0.1mm	±0.2mm	± 0.3mm	±1°

NOTICE – These drawings, specifications, or other data (1) are, and remain the property of Amphenol Corp. (2) must be returned upon request; and (3) are confidential and not to be disclosed to any person other than those to whom they are given by Amphenol Corp. The furnishing of these drawings, specifications, or other data by Amphenol Corp., or to any other person to anyone for any purpose is not to be regarded by implication or otherwise in any manner licensing, granting rights or permitting such holder or any other person to manufacture, use or sell any product, process or design, patented or otherwise, that may in any way be related to or disclosed by said drawings, specifications, or other data.

MATERIAL

REFERENCE

FINISH

DRAWN K.SHEN	DATE 18–Jan–02	
ENGINEER GSE	DATE 18–Jan–02	
APPROVED TONY	DATE 18–Jan–02	
CAD FILE F:\DWG\NF\SMAM\50\NT3G–CSZ		

TITLE
SMA MALE TO N
FEMALE ADAPTOR

SCALE: 3/1	SHEET 2 OF 2	
DWG SIZE B	CODE ID 74868	REV C

Amphenol RF
Danbury CT USA, Tainan Taiwan, Shenzhen China
www.amphenolrf.com

DRAWING NO. NF–SMAM–NT3G–50

ITEM NO. 03F–11M1–NA–5–F

PART NO. APH–SMAP–NJ