Alle Rechte vorbehalten/ *All rights reserved*

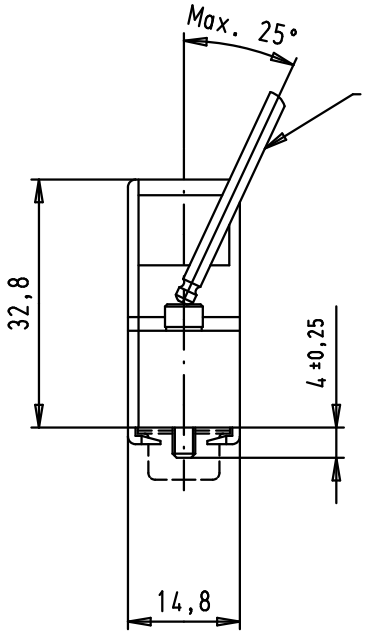

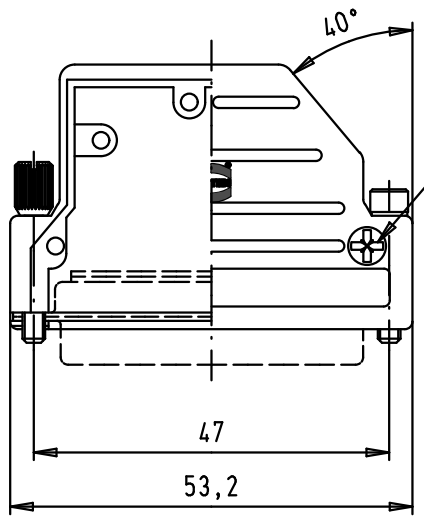

Cover screws (x3)
M2,5x6,5
Type Z posidriv
Screwdriver head #1

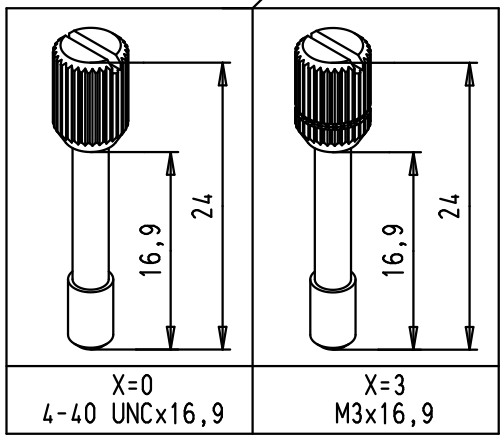

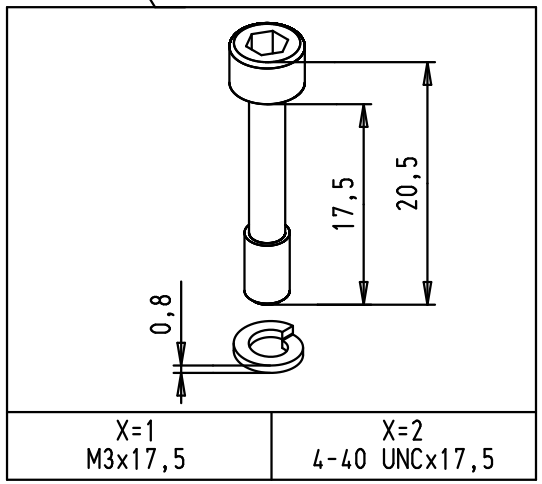

NOTA :Full metal hood made
with zinc diecast

Part number	Screw type	screw size	Mod.	Dat.	Name
61 03 001 X015					
61 03 001 3015	Knurled thumb screw	M3 x 16,9			
61 03 001 0015		4-40 UNC x 16,9			
61 03 001 2015	Cylinder socket head cap screw with spring washer [2,6 DIN 127B]	4-40 UNC x 17,5	36163	29/09/10	SC
61 03 001 1015		M3 x 17,5	32473	10/01/05	STRAUCH

	Dat.	Name
Detail.	14/08/03	STRAUCH
Insp.		
Stand.		

All Dim. in mm
Orig. Size DIN A 4

HARTING Electronics GmbH & Co. KG
D-32339 ESPELKAMP

INDUCOM - 25 poles, full metal hood
for D-Sub, angled cable entry

Maßstab/ *Scale* 1:1

TB 61 03 001 X015

Sub.

Blatt/ *Page* 1/1