Materials

1. Tip, brass, 0.03 microns gold plating
2. Ring 1, brass, 0.03 microns gold plating
3. Insulator, POM, black
4. Ring 2, brass, 0.03 microns gold plating
5. Shell, brass, 0.03 microns gold plating
6. Insulator, POM, black
7. Outer Ring, brass, 0.03 microns gold plating
8. Inner Ring, brass, 2 micron nickel plating

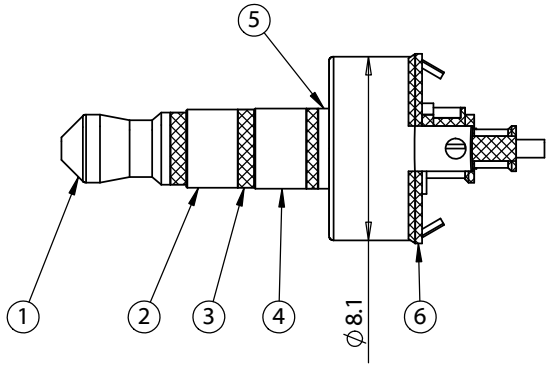

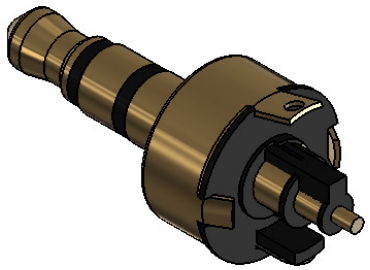

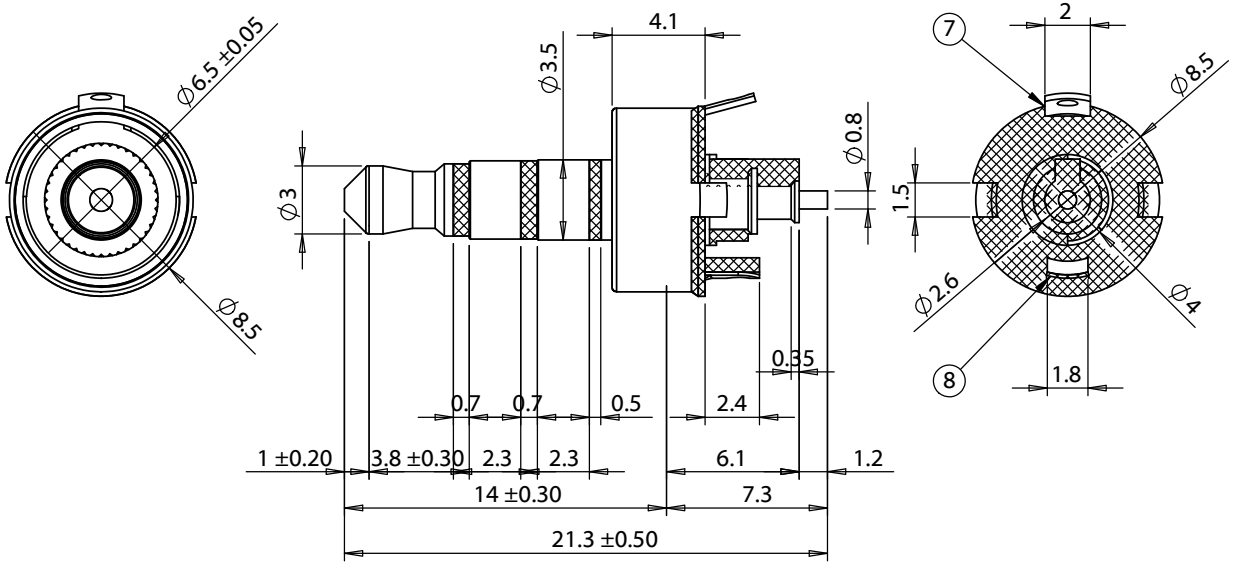

REVISION	DATE	DESCRIPTION
A	5/11/2009	Initial release
A1	8/6/2013	revised spec to show correct plating
A2	5/14/2015	revised part tooling, changed plating thickness

PREPARED:
JM
2015.05.15 10:27:55 -07'00'

VERIFIED:
AG
2015.05.15 10:51:18 -07'00'

DIMENSIONS ARE IN MILLIMETERS

TOLERANCES:
X: ± 0.5 mm
X.X: ± 0.3 mm
X.XX: ± 0.05 mm

NOTES
RoHS and REACH compliant

Function test: no open, no short circuit, no INT

DESCRIPTION:
Connector, 6C double rings audio plug, 3.5xL26.6 mm, brass Au plated, molding style

TENSILITY

20802 Sockeye Place #130
Bend, OR 97701 USA
tel 541.323.3228 *fax* 541.323.4202
800 877.670.7118 www.tensility.com

SIZE	PART NUMBER
A	**50-00009**

SCALE: 5:1	WEIGHT:	SHEET 1 OF 1

5 4 3 2 1