THIS COPY IS PROVIDED ON A RESTRICTED BASIS AND IS NOT TO BE USED IN ANY WAY DETRIMENTAL TO THE INTERESTS OF PANDUIT CORP.

A

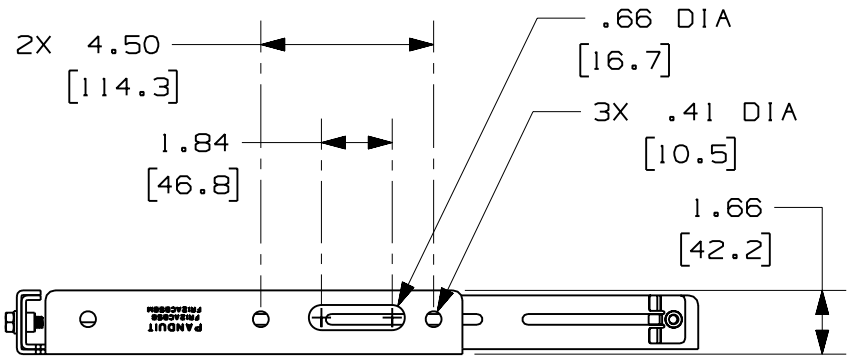

PANDUIT PART NUMBER	WEIGHT
FR12ACB58 FR12ACB58M	4.41 LB/EACH (1998g/EACH)

D

E NOTES:

1. SEE CURRENT CATALOG FOR ADDITIONAL PART SUFFIXES TO INDICATE PACKAGE QUANTITY.
2. THE FIBERRUNNER 12x4 QUIKLOCK ADJUSTABLE "C" BRACKET IS USED TO SUPPORT THE FIBERRUNNER 12x4 CABLE ROUTING SYSTEM FROM A SECTION OF NEW 5/8" (M16) THREADED ROD (NOT INCLUDED) OR CAN BE DIRECTLY MOUNTED TO THE CEILING.
3. THE FIBERRUNNER 12x4 QUIKLOCK ADJUSTABLE "C" BRACKET INCLUDES:
   ONE (1) BRACKET ASSEMBLY,
   TWO (2) 5/8-11 HEAVY HEX NUTS (FR12ACB58 ONLY),
   TWO (2) M16x2 HEX NUTS (FR12ACB58M ONLY),
   TWO (2) 5/8 HELICAL SPRING LOCKWASHERS,
   ONE (1) 1/4-20 T-BOLT,
   ONE (1) 1/4-20 HEX KEPS LOCK NUT
4. FINISH COLOR: BLACK (EXCEPT HARDWARE)
5. DIMENSIONS IN PARENTHESES ARE IN METRIC.

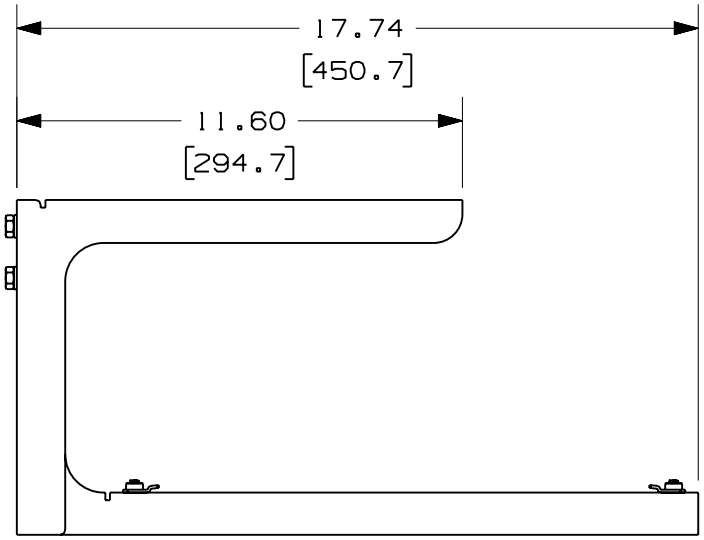

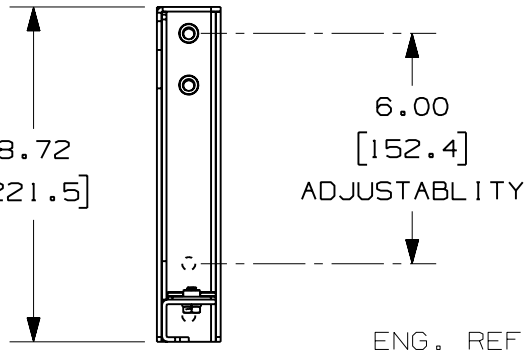

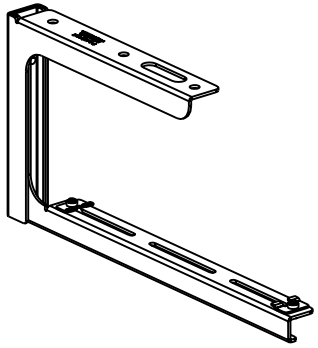

ENG. REF.: D37797ES_DC_FR12ACB58_01.prt

CAD FILENAME/LAYERS B FR12ACB58.pdf

PANDUIT CORP TINLEY PARK, ILLINOIS

C FIBERRUNNER 12x4 QUIKLOCK ADJUSTABLE "C" BRACKET - 5/8" (M16) THREADED ROD (FR12ACB58, FR12ACB58M)
CUSTOMER DRAWING

UNLESS OTHERWISE SPECIFIED, DIMENSIONAL TOLERANCES ARE:
(.X) ± (.XXX) ±
(.XX) ±.03 (.8) ANGLES ±

UNLESS OTHERWISE SPECIFIED, ALL DIMENSIONS ARE GIVEN IN INCHES, THIRD ANGLE PROJECTION.

DRAWN BY JHNU
MAT'L: STEEL
SCALE NONE
DATE 5-24-01
CHK'D HIW
DRAWING NO. 37797-101
DWG A
SIZE

REV	DATE	BY	CHK	DESCRIPTION	ECN	R	CUST	SUP	GMBH
-	--------	---	--	E. REVISED GENERAL NOTES.	--------	--	--		
-	--------	---	--	D. REVISED PART WEIGHT. C. REVISED DRAWING TITLE.	--------	--	--		
1	1-3-07	MSO	RN	B. REVISED CAD FILENAME. A. REVISED AND REDRAWN.	37797-101	RN	RN		