THIS DRAWING IS UNPUBLISHED. RELEASED FOR PUBLICATION 20
© COPYRIGHT 20 BY TYCO ELECTRONICS CORPORATION. ALL RIGHTS RESERVED.

LOC	DIST
ES	00

REVISIONS

P	LTR	DESCRIPTION	DATE	DWN	APVD
	A	INITIAL RELEASED	27NOV2006	A.S	S.Y

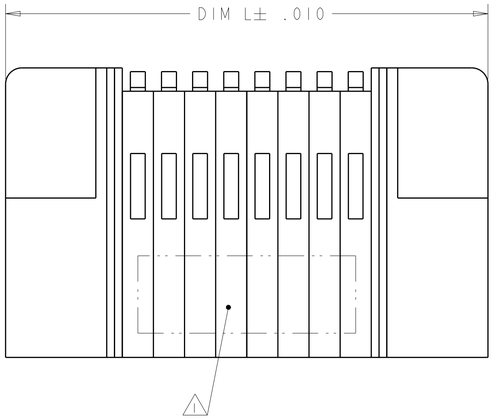

1. PART NUMBER, AND DATE CODE MARKED IN AREA SHOWN.
2. MATERIAL:
   HOUSING - GLASS FILLED HIGH TEMP THERMO PLASTIC, UL94 V-O
   SIGNAL CONTACT - COPPER ALLOY
   POWER CONTACT - HIGH CONDUCTIVITY COPPER ALLOY
3. CONTACT PLATING: NOBLE METAL PLATING ON CONTACT FUNCTIONAL AREA OF POWER AND SIGNAL CONTACTS
4. MECHANICAL CONNECTOR KEEP OUT ZONE.
5. DATUM AND BASIC DIMENSIONS ESTABLISHED BY CUSTOMER.
6. PCB - ALL HOLE DIAMETERS ARE FINISHED HOLE SIZES.
7. PCB - .0453±.0010 DRILLED HOLES PLATED WITH .0003 MIN Sn OVER .001 TO .003 Cu PLATING TO ACHIEVE A .040 HOLE.

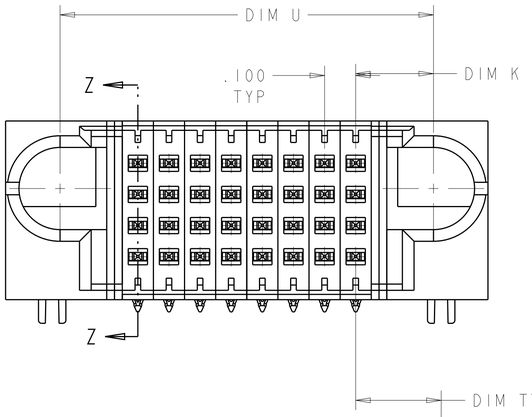

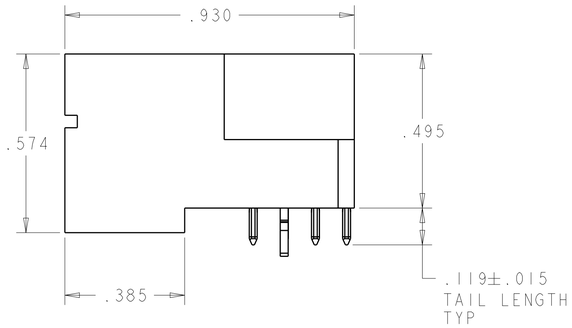

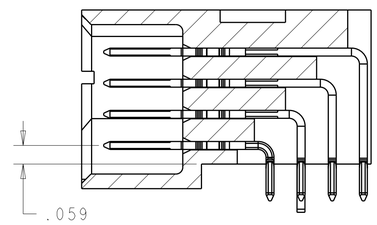

SECTION Z-Z

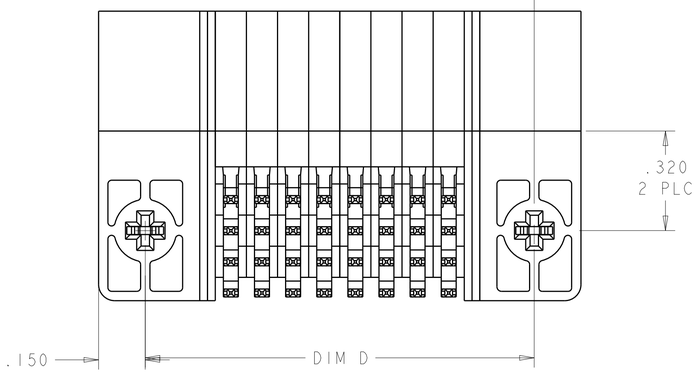

.275	1.200	1.250	.250	1.550	32S	6450531-1
DIM TT	DIM U	DIM D	DIM K	DIM L	DESCRIPTION	PART NUMBER

THIS DRAWING IS A CONTROLLED DOCUMENT FOR TYCO ELECTRONICS CORPORATION. IT IS SUBJECT TO CHANGE AND THE CONTROLLING ENGINEERING ORGANIZATION SHOULD BE CONTACTED FOR THE LATEST REVISION.

DIMENSIONS: INCHES

TOLERANCES UNLESS OTHERWISE SPECIFIED:

0 PLC	±
1 PLC	±
2 PLC	±.01
3 PLC	±.005
4 PLC	±.0020
ANGLES	±2°

MATERIAL - 2

FINISH 3

DWN	ALEX SHOAL	27NOV2006
CHK	SUNY ZHAO	27NOV2006
APVD	STEVEN YAO	27NOV2006

PRODUCT SPEC 108-1973

APPLICATION SPEC 114-13038

WEIGHT -

tyco Electronics

Tyco Electronics incorporated
ShangHai,P.R.China.200233

NAME
RIGHT ANGLE HEADER ASSEMBLY
W/GUIDES,PRESS FIT
MULTI-BEAM XL

SIZE	CAGE CODE	DRAWING NO	RESTRICTED TO
A1	00779	C-6450531	-

CUSTOMER DRAWING

SCALE	SHEET	OF	REV
4:1	1	2	A1

THIS DRAWING IS UNPUBLISHED. RELEASED FOR PUBLICATION 20
© COPYRIGHT 20 BY TYCO ELECTRONICS CORPORATION. ALL RIGHTS RESERVED.

LOC	DIST
ES	00

REVISIONS

P	LTR	DESCRIPTION	DATE	DWN	APVD
	-	SEE SHEET 1	-	-	-

PART NUMBER	ROWS	SIGNAL 1	2	3	4	5	6	7	8
6450531-1	D	Z5	Z5	Z5	Z5	Z5	Z5	Z5	Z5
	C	Y5	Y5	Y5	Y5	Y5	Y5	Y5	Y5
	B	R5	R5	R5	R5	R5	R5	R5	R5
	A	05	05	05	05	05	05	05	05
32S		HD							HD

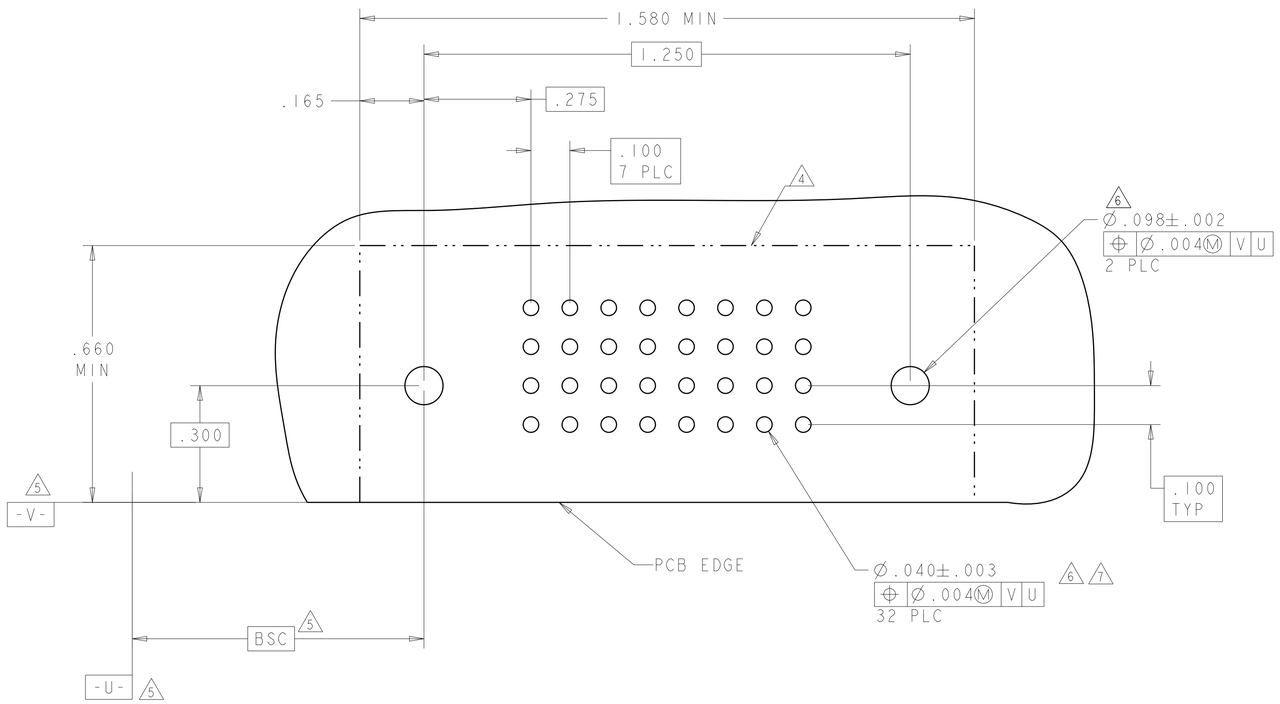

ROW	DESCRIPTION	CODE
D	SIGNAL CONTACT, STD	Z5
C	SIGNAL CONTACT, STD	Y5
B	SIGNAL CONTACT, STD	R5
A	SIGNAL CONTACT, STD	05

THIS DRAWING IS A CONTROLLED DOCUMENT FOR TYCO ELECTRONICS CORPORATION. IT IS SUBJECT TO CHANGE AND THE CONTROLLING ENGINEERING ORGANIZATION SHOULD BE CONTACTED FOR THE LATEST REVISION.

DIMENSIONS: INCHES

TOLERANCES UNLESS OTHERWISE SPECIFIED:

0 PLC	± -
1 PLC	± -
2 PLC	± .01
3 PLC	± .005
4 PLC	± .0020
ANGLES	± 2°

MATERIAL - -

FINISH - -

DWN	ALEX SHOAL	27NOV2006
CHK	SUNY ZHAO	27NOV2006
APVD	STEVEN YAO	27NOV2006

PRODUCT SPEC 108-1973

APPLICATION SPEC 114-13038

WEIGHT -

tyco Electronics — Tyco Electronics incorporated, ShangHai,P.R.China.200233

NAME: RIGHT ANGLE HEADER ASSEMBLY W/GUIDES,PRESS FIT MULTI-BEAM XL

SIZE	CAGE CODE	DRAWING NO	RESTRICTED TO
A1	00779	C-6450531	-

CUSTOMER DRAWING

SCALE	SHEET	OF	REV
4:1	2	2	A1