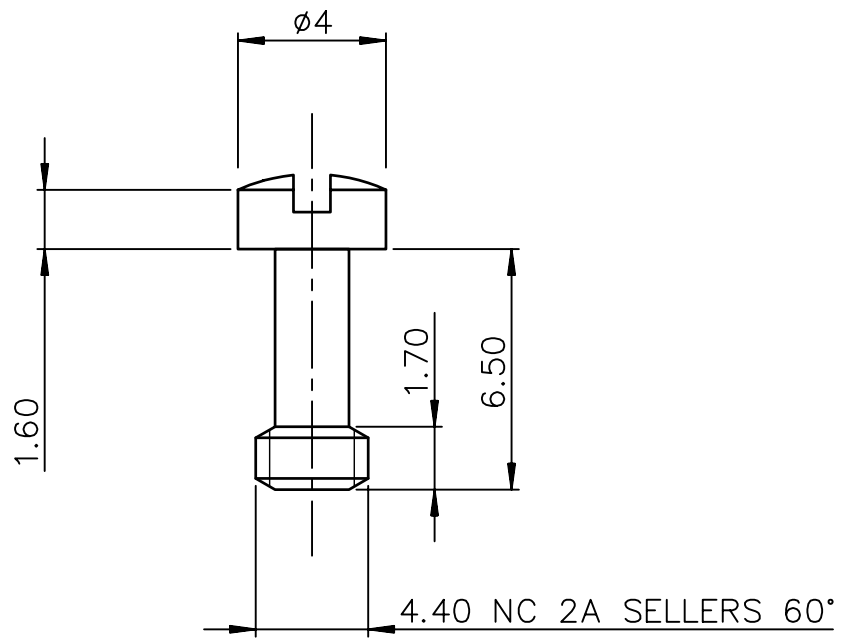

ASSEMBLY VIEW

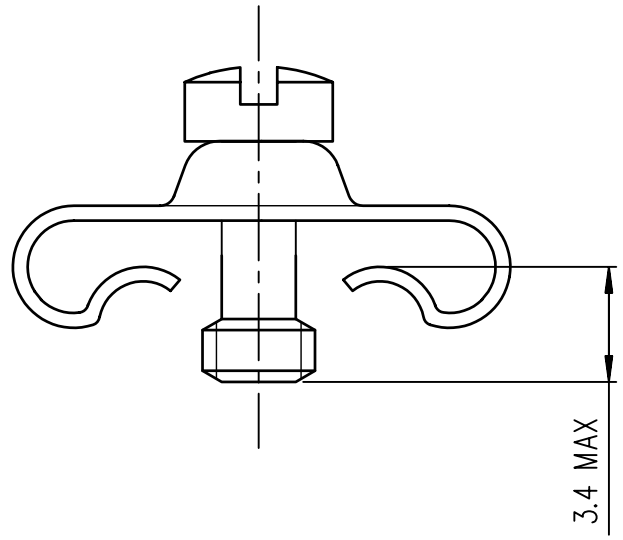

NOTES

Pieces assembly
Packaging : per 100 piece
Material : steel
Plating : tin plating
Thread : UNC 4.40

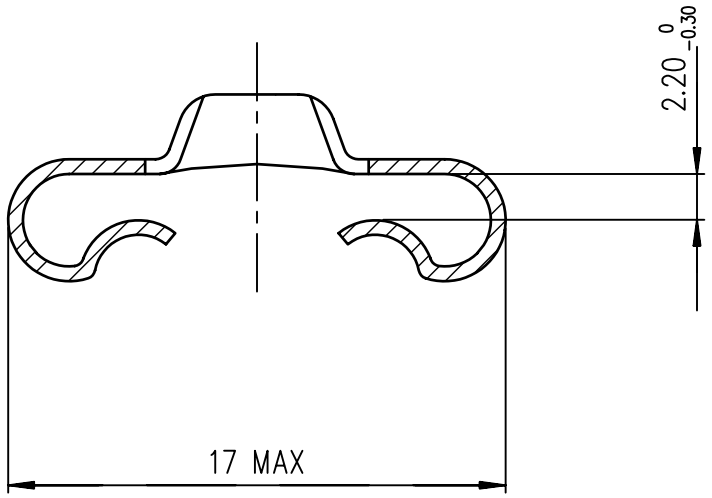

NOTE: RoHS INFORMATION

- The "LF" product meets European union Directives and other country regulations as described in GS-22-008.
- The product is not intented to be exposed to a manufacturing solder process.
- Plating: Sn pure bright over Copper.
- Packaging spec: see GS-14-920.

LEAD-FREE PART-NUMBER

Part number	863002ATLF

European Views

rev	ecn no	dr	date
A	LS06-0101	LGO	2006/06/23
B	I11-0022	AMR	2011/01/25
C	ELX-H-011663	PK	2012/05/09
D	ELX-H-011686	PK	2012/05/21
-	-	-	-
-	-	-	-
-	-	-	-

www.fciconnect.com

surface ISO 1302 ✓ | tolerance std ISO 406 ISO 1101 | projection | mm

TOLERANCES UNLESS OTHERWISE SPECIFIED

Dr	GOISNARD	2006/06/23	ANGULAR	LINEAR	0.X	±0.1
Eng	PESSON	2006/06/23			0.XX	±0.1
Chr	ABHILASH	2011/01/25	0.XX° ±2°		0.XXX	±0.1
Appr	SUDHIR	2011/01/25	Product family		D-SUB	

size A3 | Scale 5:1 | ECN ELX-H-011686 | Spec ref -

title: MALE SCREW LOCKS FOR CONNECTOR 50 PTS

dwg no C01-8655-1675 | Rev. D

catalog no - | CUSTOMER | sheet 1 of 1

REV F - 2006-04-17