THIS COPY IS PROVIDED ON A RESTRICTED BASIS AND IS NOT TO BE USED IN ANY WAY DETRIMENTAL TO THE INTERESTS OF PANDUIT CORP.

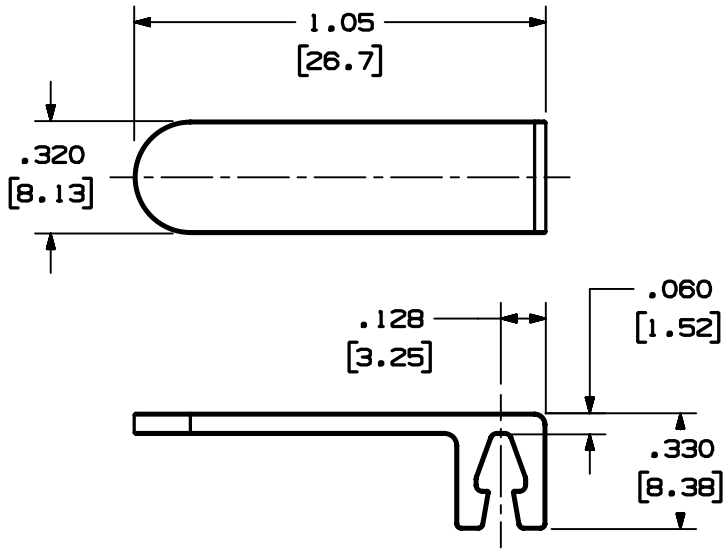

NOTES:
1. SEE CURRENT CATALOG FOR ADDITIONAL PART SUFFIXES TO INDICATE COLOR AND/OR PACKAGE QUANTITY.
2. DIMENSIONS IN INCHES [MILLIMETERS].

PART NO.	WEIGHT
T3WR	.001 LBS .622 g

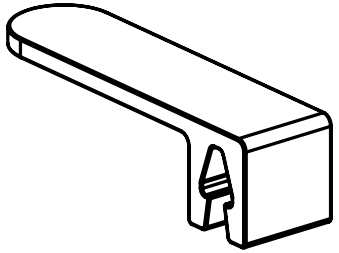

REV	DATE	BY	CHK	DESCRIPTION	ECN - R		CUST	SUP
1	2-28-02	JCST	JKG	A. CHANGED DRAWING AND ECN NUMBER FROM 36401-07 TO 36401-08	36401-08	RTFI	RTFI	
R	9-7-01	JCST	JKG	RELEASED TO PRODUCTION	36401-07	JKG	JKG	

CAD FILENAME/LAYERS: D36401BD_DC_T3WR_00B.prt

PANDUIT CORP. TINLEY PARK, ILLINOIS

DIVIDER WALL WIRE RETAINER (T3WR) CUSTOMER DRAWING

UNLESS OTHERWISE SPECIFIED, DIMENSIONAL TOLERANCES ARE:
(.X) ± .1 (.XXX) ± .005
(.XX) ± .01 ANGLES ± 1°

UNLESS OTHERWISE SPECIFIED, ALL DIMENSIONS ARE GIVEN IN INCHES, THIRD ANGLE PROJECTION.

DRAWN BY: JCST
DATE: 9-07-01
CHK'D: JKG

MAT'L: DUPONT ZYTEL 101F (NYLON)

SCALE: 2X

DRAWING NO.: 36401-08 (A)

DWG SIZE: A