NOTES

Pieces assembly
Packaging : per 100 pieces
Material : steel
Plating : tin
Thread : UNC 4.40

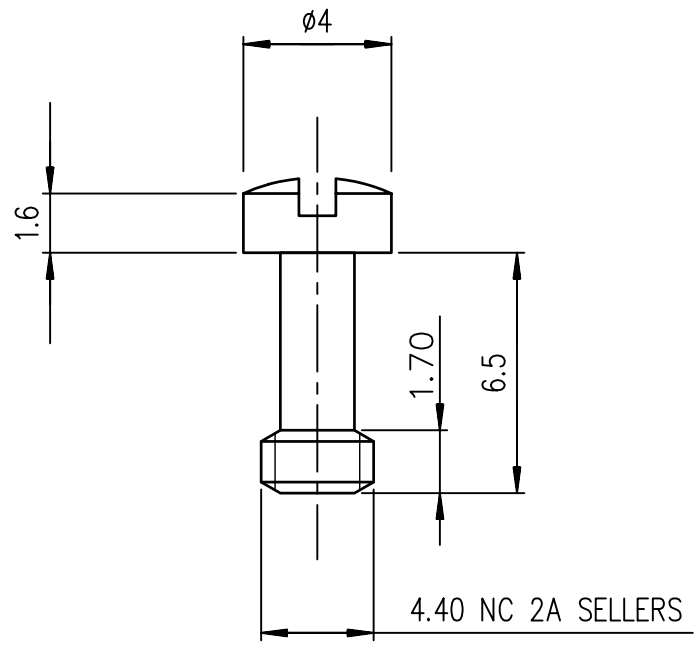

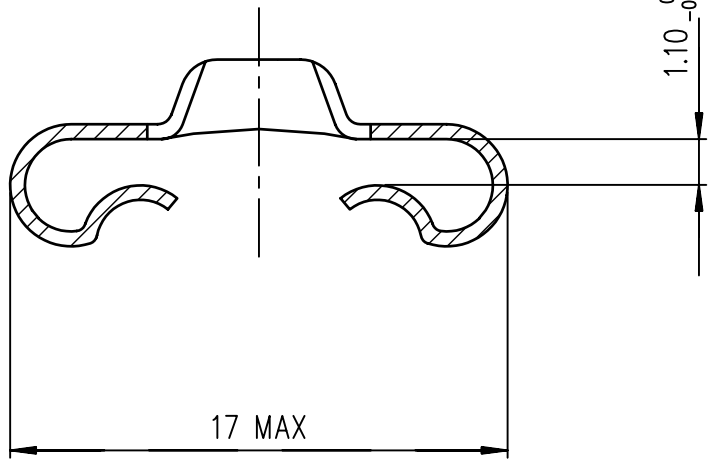

ASSEMBLY VIEW

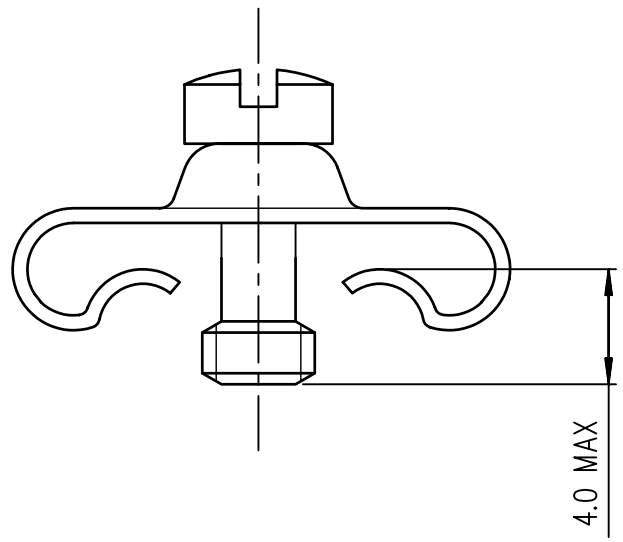

Part number	863003ATLF

European Views

NOTE: RoHS INFORMATIONS

- The "LF" products meet European union Directives and other country regulations as described in GS-22-008.
- Plating Sn (pure bright) over copper
- Packaging spec: see GS-14-920

rev	ecn no	dr	date
H	ELX-H-011663	PK	2012/05/09
J	ELX-H-011686	PK	2012/05/21
C	LS06-0097	LGO	2006/07/28
D	LS09-0006	PCR	2009/01/08
E	I09-0168	AMR	2009/08/14
F	I11-0022	AMR	2011/01/25
G	I11-0165	PK	2011/10/05

www.fciconnect.com

surface ISO 1302 ✓ | tolerance std ISO 406 ISO 1101 | projection | mm

TOLERANCES UNLESS OTHERWISE SPECIFIED

Dr	BART	2004/02/26	ANGULAR	LINEAR	0.X	±0.1	size A3
Eng	PESSON	2004/02/26			0.XX	±0.1	Scale 5
Chr	ABHILASH	2009/07/10	0.XX° ±2°		0.XXX	±0.1	ECN ELX-H-011686
Appr	SUDHIR	2009/07/10	Product family			D-SUB	Spec ref -

title: MALE SCREW LOCKS
SHELL 50 D SUB ACCESSORIES

dwg no: C01-8655-1587 Rev. J

catalog no -

CUSTOMER sheet 1 of 1

REV F - 2006-04-17