This document was generated on 03/08/2013

PLEASE CHECK WWW.MOLEX.COM FOR LATEST PART INFORMATION

Part Number: 63802-6400

Status: Active

Description: Rear Feed Mini-Mac™ Applicator for Flag Quick Disconnect Female Terminals, 14-16 AWG Wire

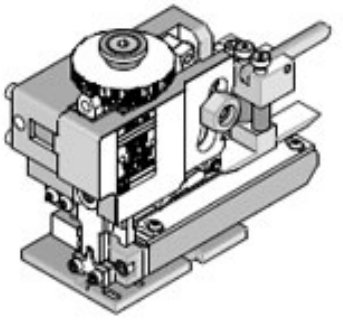

Series

image - Reference only

Documents:
RoHS Certificate of Compliance (PDF)

General

Product Family	Application Tooling
Series	T1101
Comments	See Tooling Specification (PDF) Above
Function	Crimp
Geographic Area	Global
Level of Automation	Automatic, Semi-Automatic
More Detailed Tech Information	applicationtooling@molex.com
Product Name	Mini-Mac™
Survey	www.molex.com//review/apptool_survey.html
Tool Type	Applicator
UPC	883906944308

Material Info

Reference - Drawing Numbers

Application Tooling Documents	ATS-638026400, TM-638000100, TM-638000100SP

EU RoHS **China RoHS**
Compliance Status
Not Reviewed
REACH SVHC
Not Reviewed
Low-Halogen Status
Not Reviewed

Need more information on product environmental compliance?

Email productcompliance@molex.com
For a multiple part number RoHS Certificate of Compliance, click here

Please visit the Contact Us section for any non-product compliance questions.

Search Parts in this Series
T1101Series

Use With
Flag InsulKrimp™ Quick Disconnect 19007

Application Tooling Description	| FAQ Product #
Flag InsulKrimp™ Quick Disconnect, Female, for 14-16 (2.00-1.30mm²) Wire, Metal Strip, Tab 6.35 x 0.81mm	0190070028
Flag InsulKrimp™ Quick Disconnect, Female, for 14-16 (2.00-1.30mm²) Wire, Metal Strip, Tab 4.75 x 0.51mm	0190070034
Flag InsulKrimp™ Quick Disconnect, Female, for 14-16 (2.00-1.30mm²) Wire,	0190070039

Metal Strip, Tab 4.75
x 0.81mm

This document was generated on 03/08/2013
PLEASE CHECK WWW.MOLEX.COM FOR LATEST PART INFORMATION