Alle Rechte vorbehalten/ *All rights reserved*

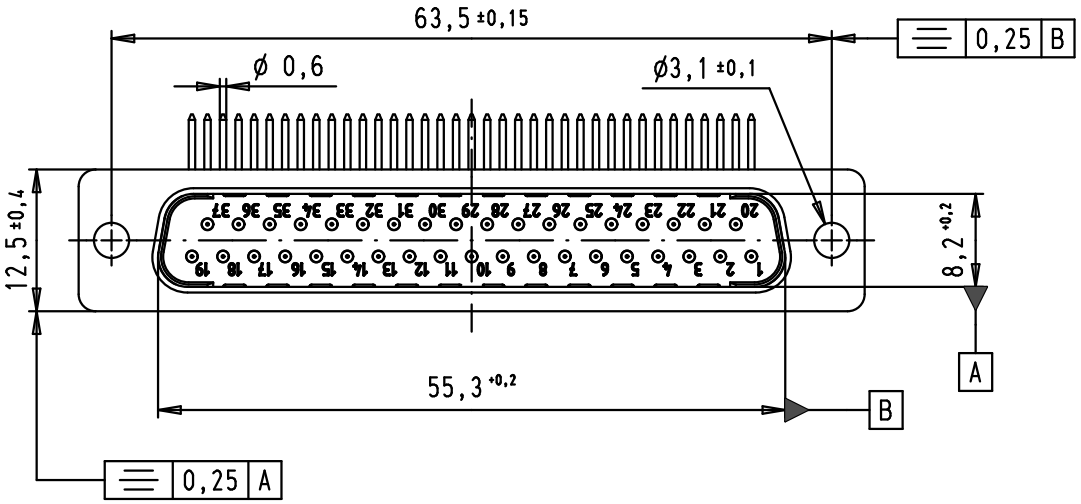

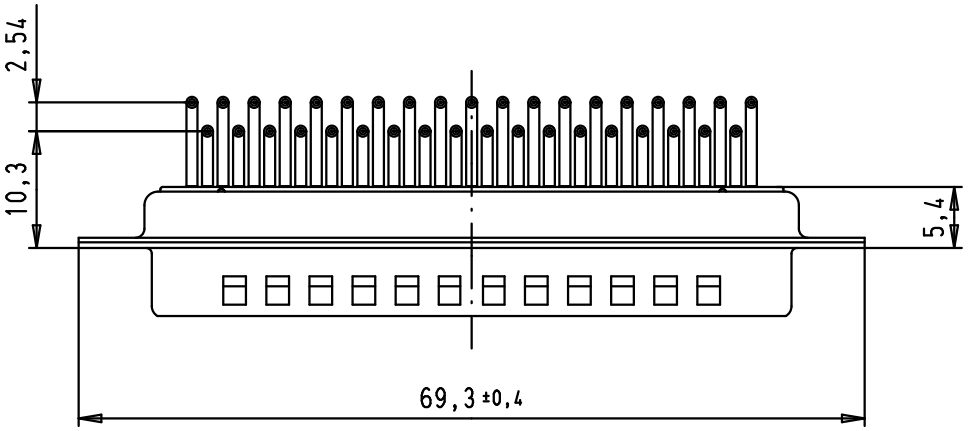

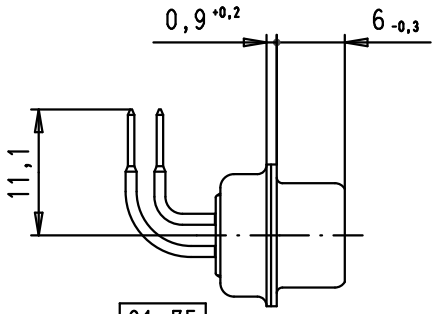

SPECIFICATIONS

Mating cycles	500
Filter type	C
Capacitance	1000 pF±20%
Working voltage	100 V
Current rating	7,5 A
Insulation resistance	>1 GΩ

FREQUENCY (MHz)	ATTENUATION (dB)
5	1
10	3
50	12
100	20
500	34
1000	30

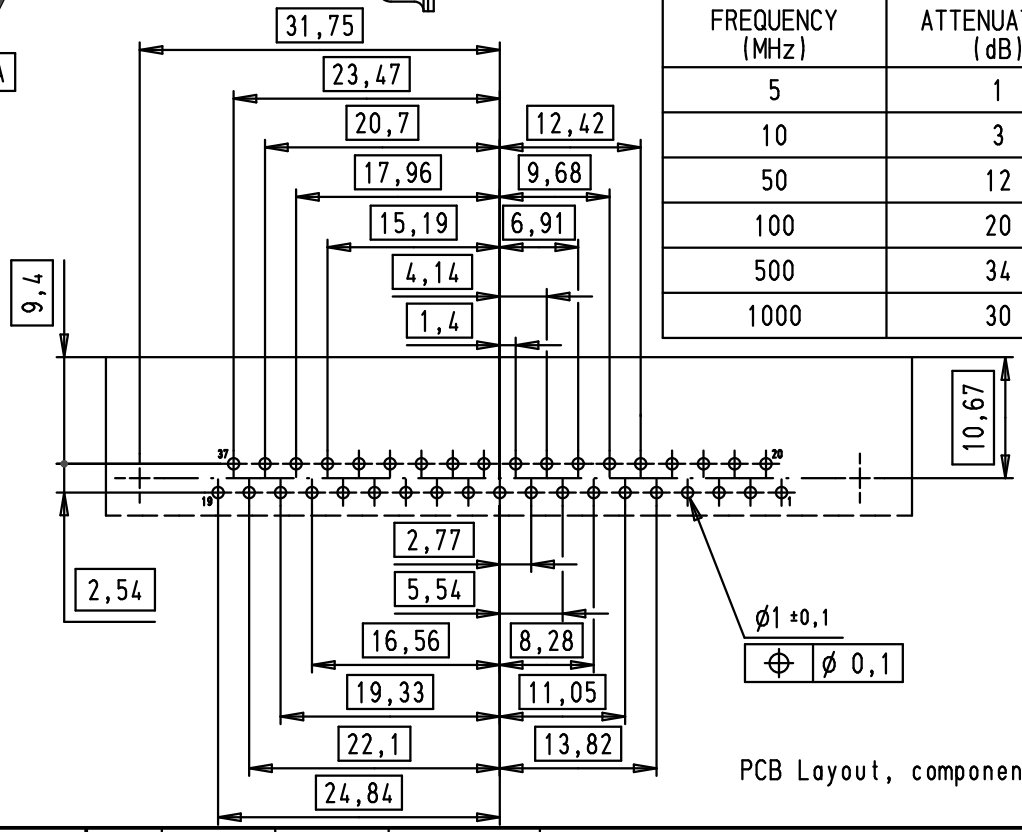

PCB Layout, component side

				Dat.	Name
			Detail.	08/07/02	CV
			Insp.		
35300	01/12/08	PK	Stand.		
33800	03/08/06	PK			
31058	08/07/02	CV			
Mod.	Dat.	Name			

All Dim. in mm
Orig. Size DIN A 4

D-Sub, male, angled,
37 poles,
turned solder pins

Maßstab/ *Scale* 1,5:1

HARTING EURL
F-95972 Paris

TB 09 64 424 7230

Sub.

Blatt/ *Page* 1/1